Design of CLASSIC++

Peter Tuthill, Marc-Antoine Martinod

University of Sydney

And

Laszlo Sturmann, Theo ten Brummelaar, Cyprien Lanthermann

CHARA

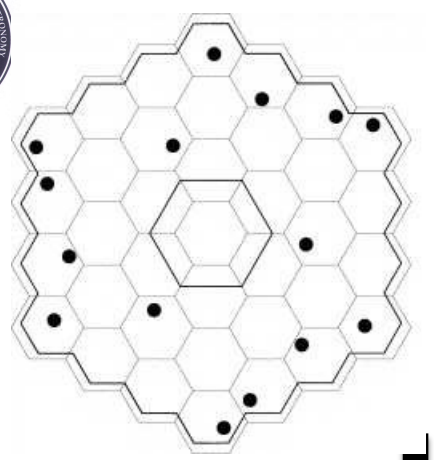

Fizeau Interferometry

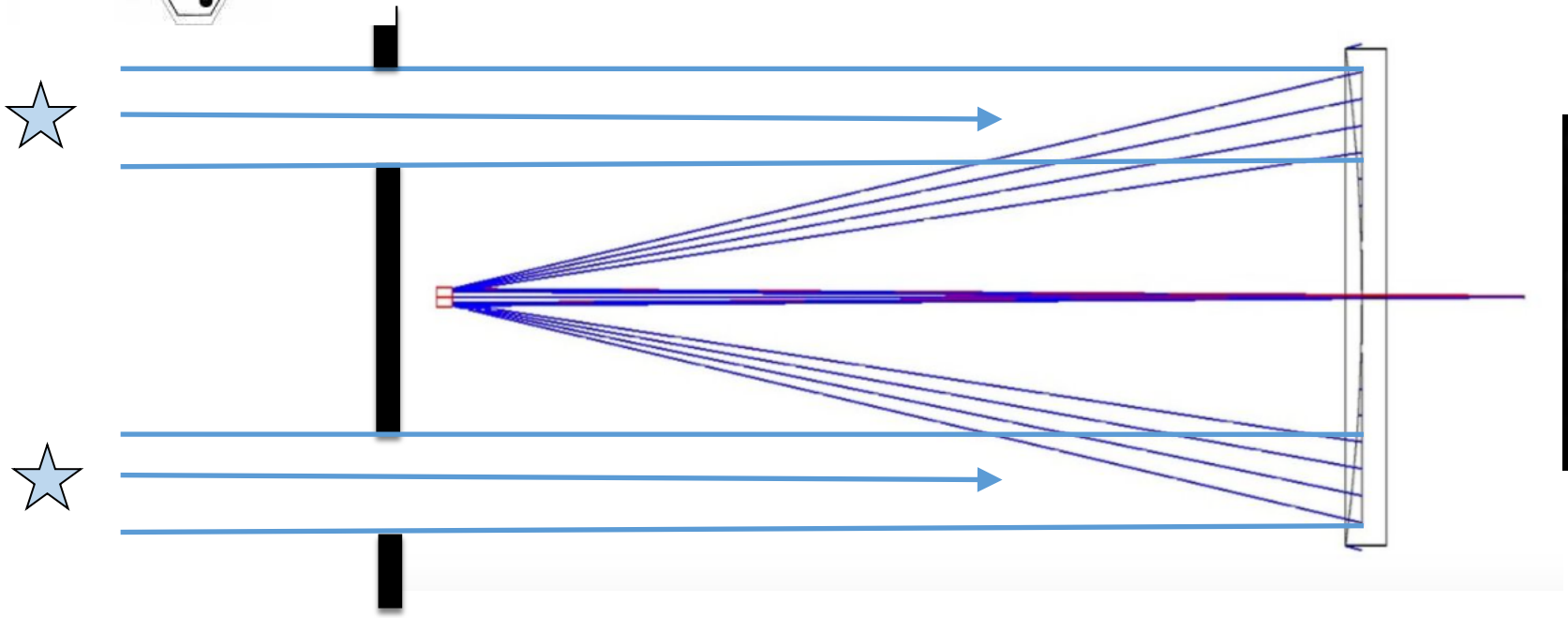

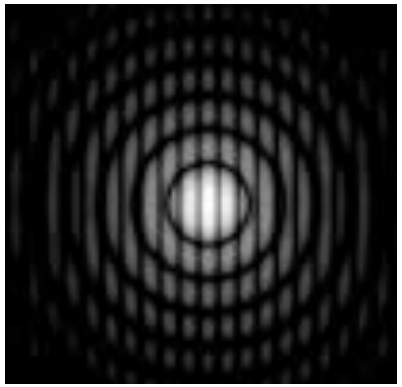

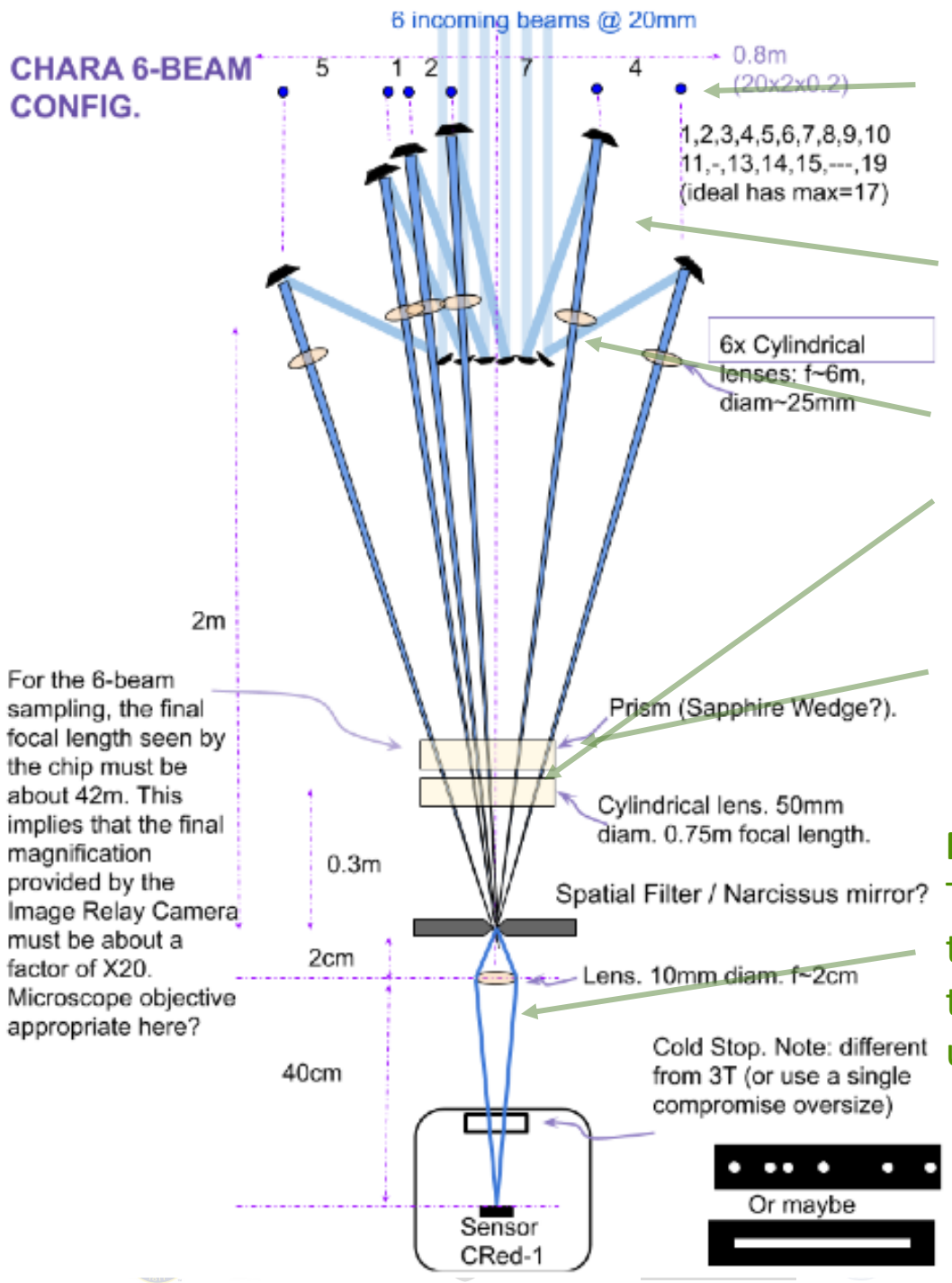

Input beams: arrange into 6-element non-redundant linear array

Optical Fan: 2-mirrors to effect beam spacings

Cylindrical Lenses: 2-lens anamorphic beam focus

Dispersion: weak prism

Magnification x20: Takes final focal length to about 40m required to Nyquist sample 19-unit longest baseline.

How many pixels, where 1 unit = hole sep?

= 20 spacings × 3 pixels per fringe
= 60 pixels × 2.4 diffraction of hole
= 144 pixels.

Now multiply by number of spectral Channels for in cross dispersion … say × 10 pix gives LOTS of pixels.

Compromise required to deliver ALL 15 baselines takes us away from the main point: sensitivity.

But there is a clue here.

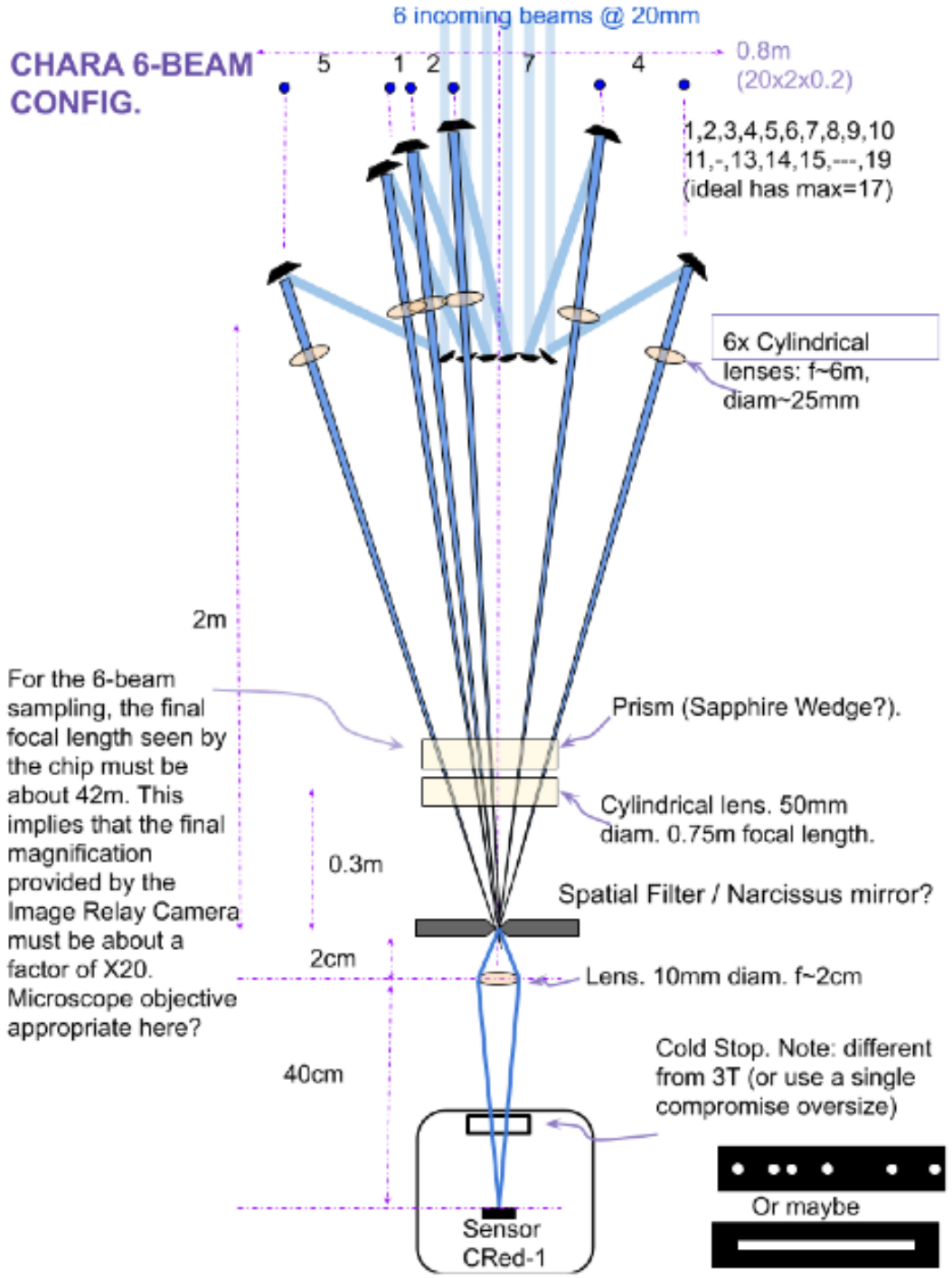

How many pixels, where 1 unit = hole sep?

= 20 spacings × 3 pixels per fringe
= 60 pixels × 2.4 diffraction of hole
= 144 pixels.

Now multiply by number of spectral Channels for in cross dispersion … say × 10 pix gives LOTS of pixels.

Compromise required to deliver ALL 15 baselines takes us away from the main point: sensitivity.

But there is a clue here.
What if we only try for 3 beams?
Factor of × 5 fewer pix ….

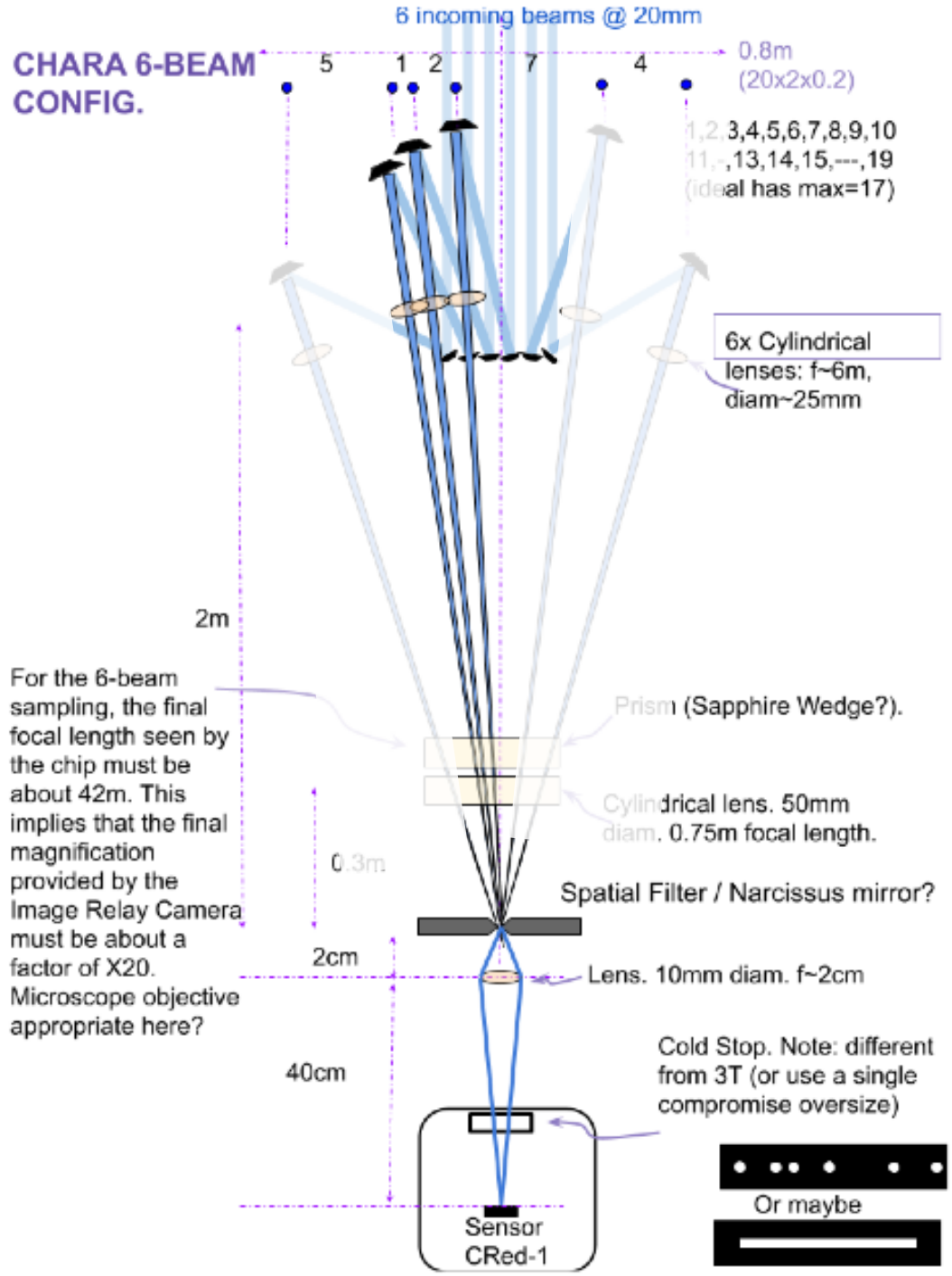

CHARA 2x3 BEAM CONFIG.

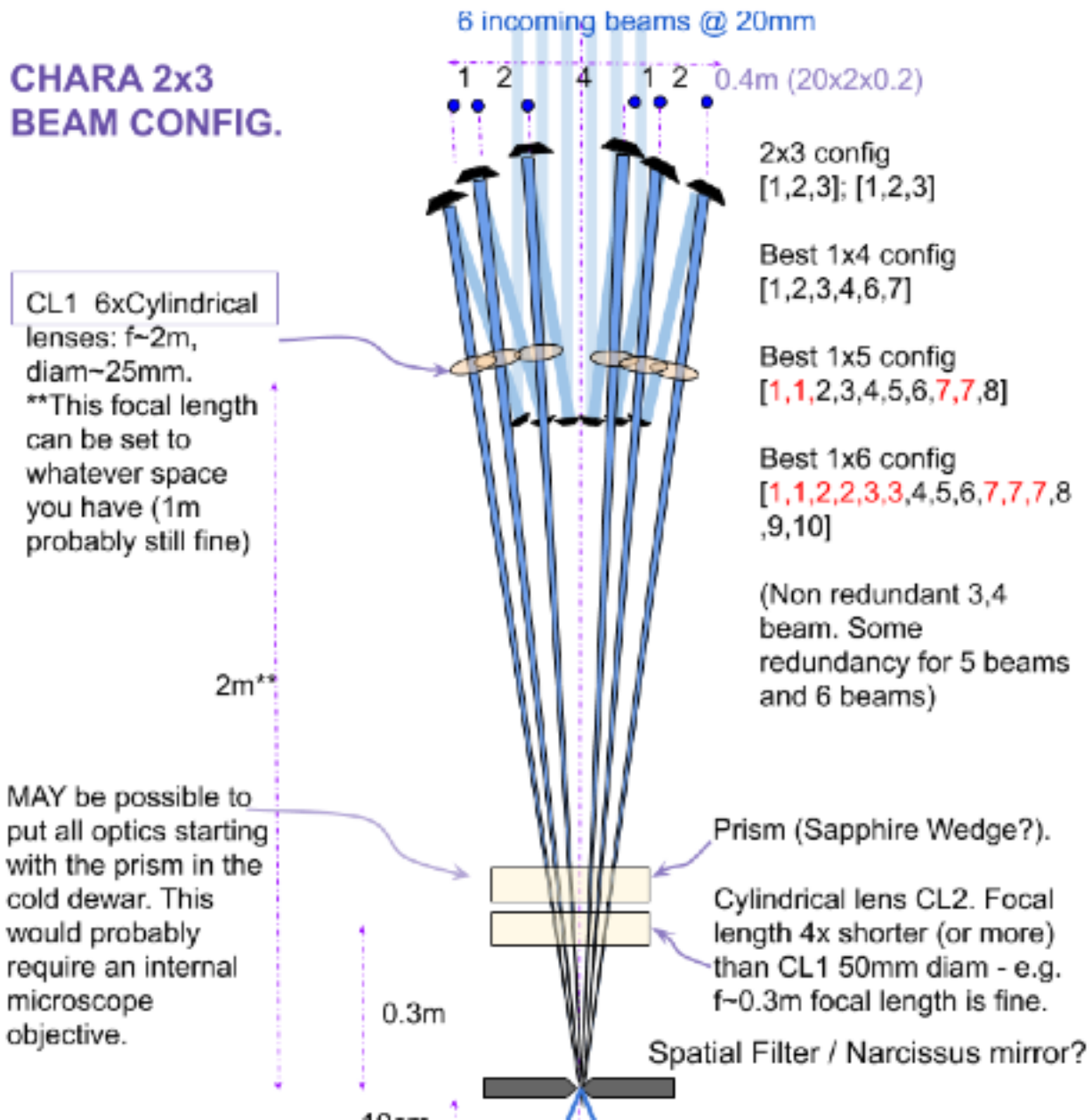

m
20x2x0.2)

3 config
2,3]; [1,2,3]

st 1x4 config
2,3,4,6,7]

st 1x5 config
1,2,3,4,5,6,7,7,8]

st 1x6 config
1,2,2,3,3,4,5,6,7,7,7,8
10]

on redundant 3,4
am. Some
lundancy for 5 beams
d 6 beams)

(Sapphire Wedge?).

rical lens CL2. Focal
4x shorter (or more)
L1 50mm diam - e.g.
focal length is fine.

er / Narcissus mirror?

mm diam. f~8cm

ld Stop. Note: different
m 3T (or use a single
mpromise oversize)

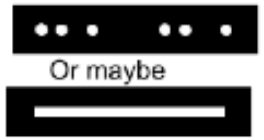

Beams: 1,2,3

Beams: 4,5,6

京都大学 KYOTO UNIVERSITY EXETER UNIVERSITY OF

Pixels now

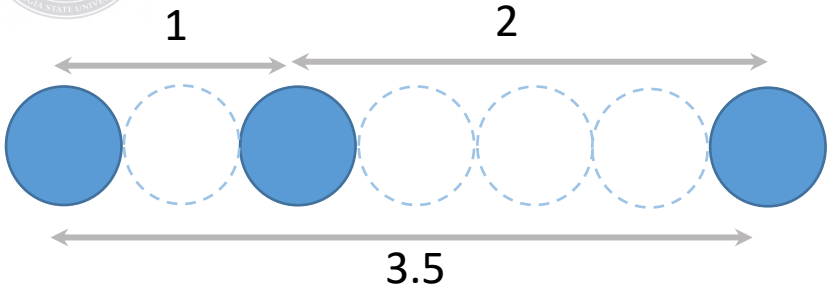

Calculations now means we only need about 45 spatial pix, multiply by number of spectral Channels for in cross dispersion.

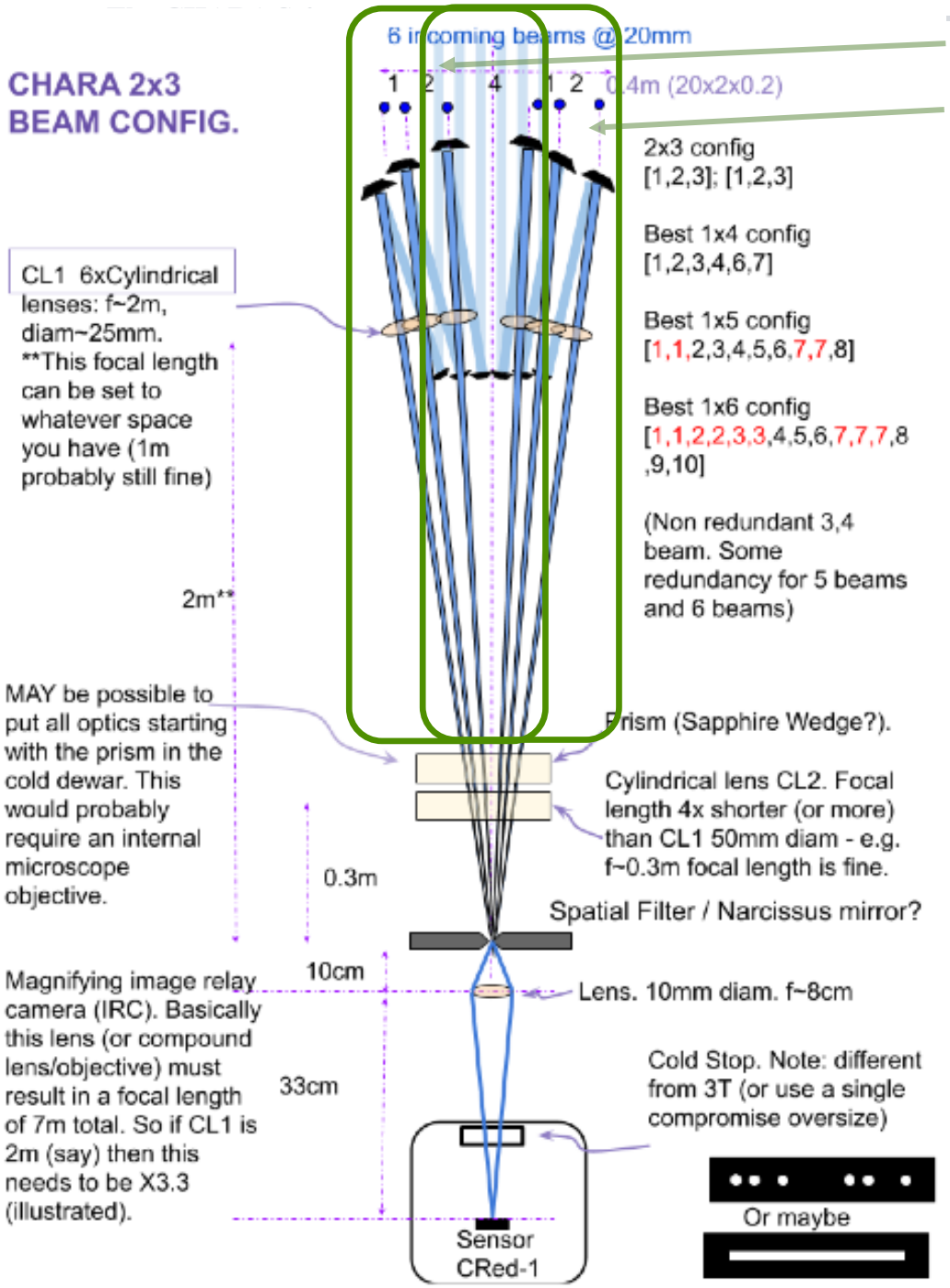

Add Go-Faster Stripes!

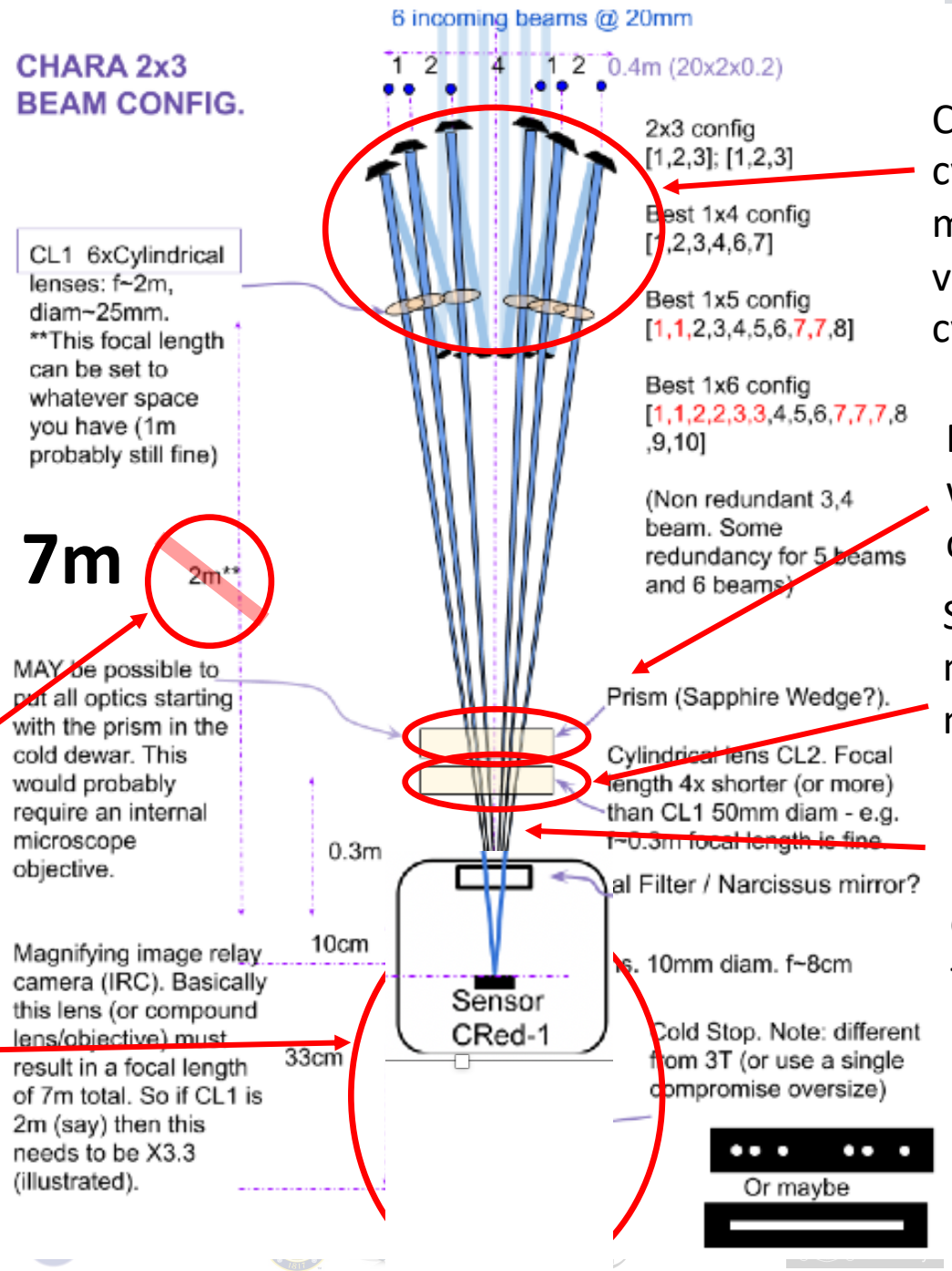

Consolidate: 1 flat mirror + 1 cylindrical lens → 1 cylindrical mirror. However supplier for very weak 7m focal length cylinder (stress polish?).

Prism only needs to be very weak (sapphire wedge ~few degrees)

Second anamorphic cylinder may be consolidated with fold mirror

Note the simpler 7m focal length system does not have a common focus (e.g. spatial filter) before the image plane.

Magnifying relay optics now only ×3.3 acting on 2m = 7m focal length. Simplify and remove?

Feature Summary

- Configurable
- Can do 1 × 3 beams 1 × 4, simultaneous 2 × 3 …
- Very few optical elements: minimum is 1 fold mirror, 2 cylinders, 1 prism = 4 total.
- Dispersed channel spectrum: any resolution.
- Economical on pixels.
- 100% duty cycle on fringe.
- Tracking: Direction + distance to W.Light fringe!
- Measures longitudinal dispersion.

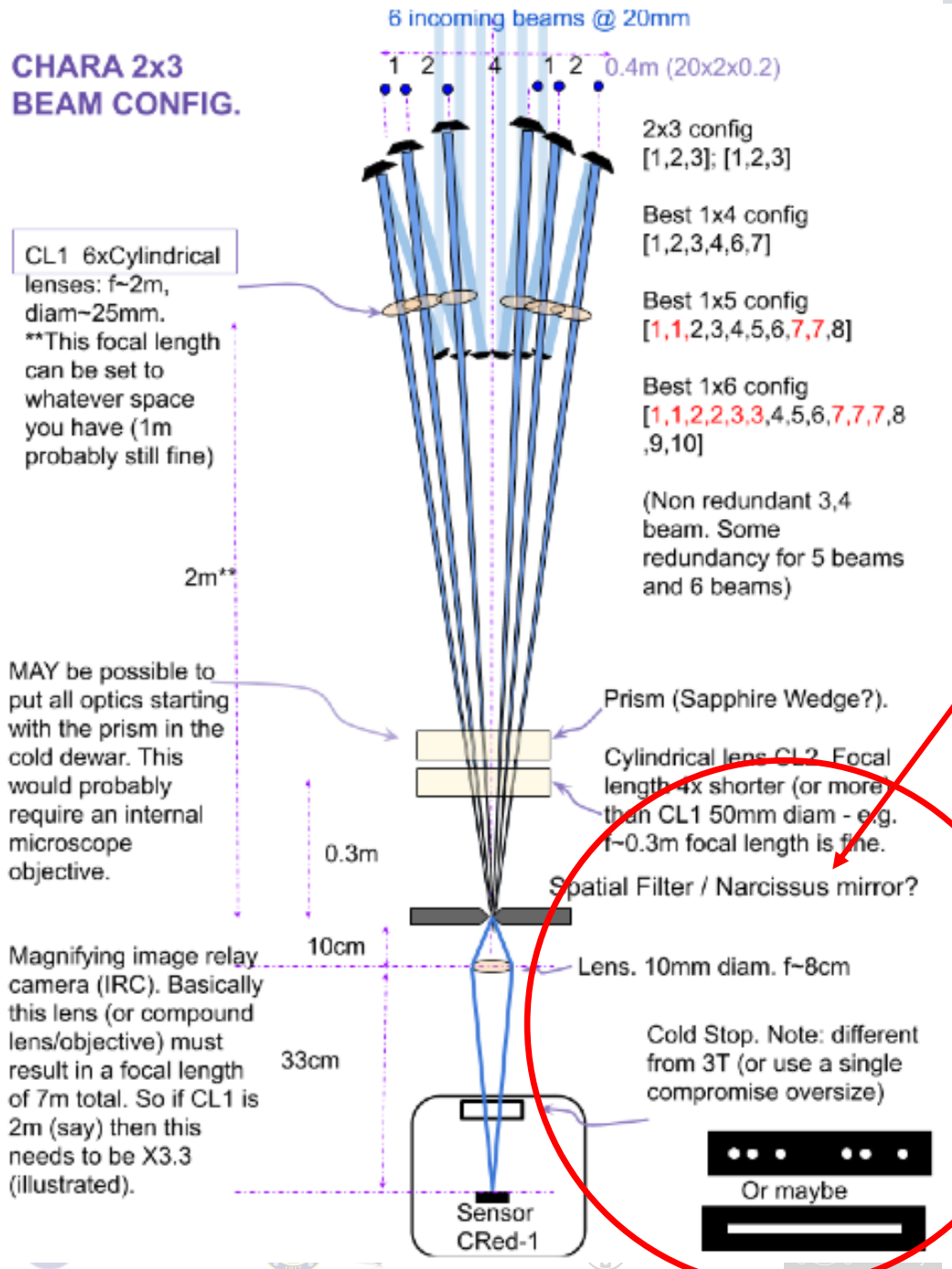

Finally, cold stop system. Two elements, oversize stop in cold chamber, warm Narcissus mirror upstream. Any experience with Narcissus mirrors please let us know how it went!

Possible beam-path for the proposed image-plane combiner

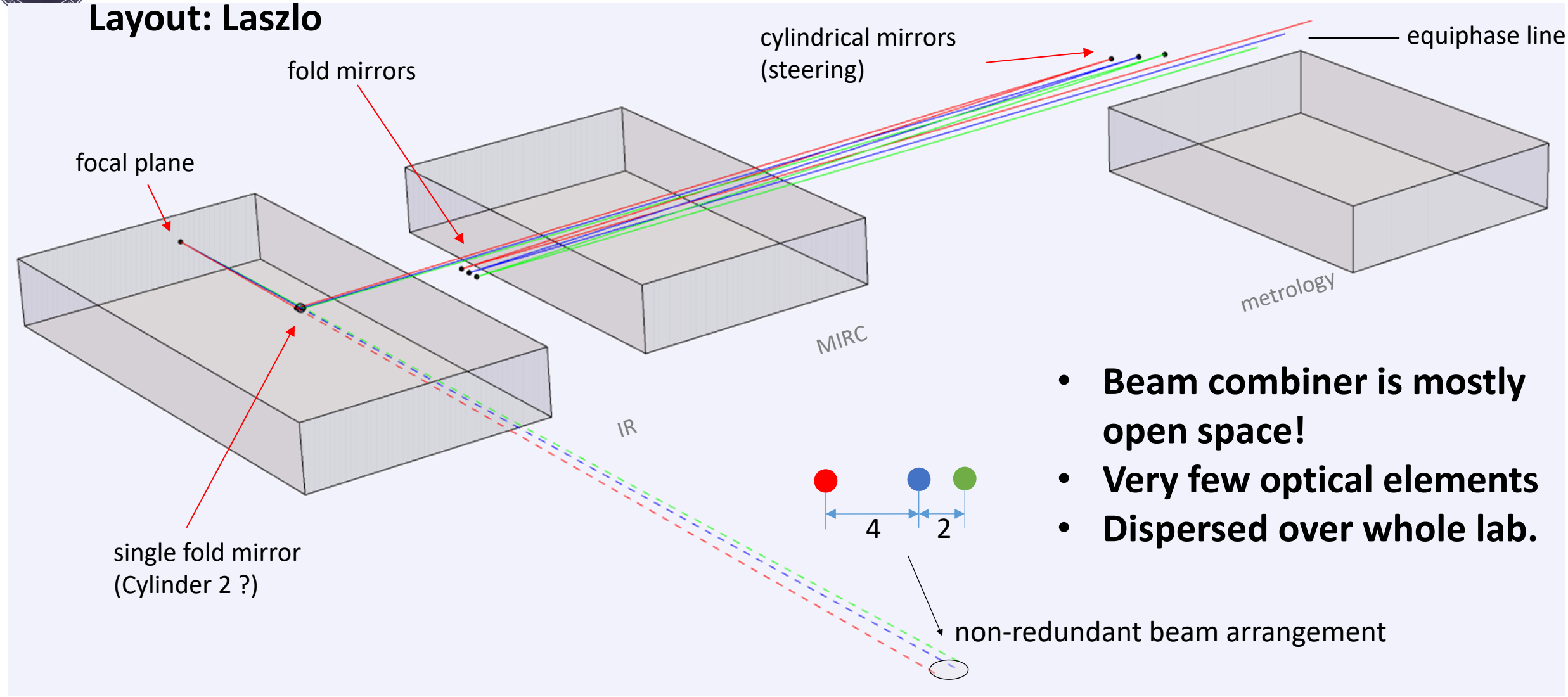

- **Beam combiner is mostly open space!**
- **Very few optical elements**
- **Dispersed over whole lab.**

MROI: **F**ree-space **O**ptical multi-apert**U**re combine**R** for **I**nt**ER**ferometry (FOURIER)

PROCEEDINGS OF SPIE

SPIEDigitalLibrary.org/conference-proceedings-of-spie

First laboratory results from FOURIER, the initial science combiner at the MROI

Mortimer, Daniel, Buscher, David, Creech-Eakman, Michelle, Haniff, Chris, Ligon, Edgar, et al.

Daniel J. Mortimer, David F. Buscher, Michelle J. Creech-Eakman, Chris Haniff, Edgar Ligon, James Luis, Christopher Salcido, Eugene Seneta, Xiaowei Sun, John Young, "First laboratory results from FOURIER, the initial science combiner at the MROI," Proc. SPIE 11446, Optical and Infrared Interferometry and Imaging VII, 114460V (13 December 2020); doi: 10.1117/12.2561472

SPIE.

Event: SPIE Astronomical Telescopes + Instrumentation, 2020, Online Only

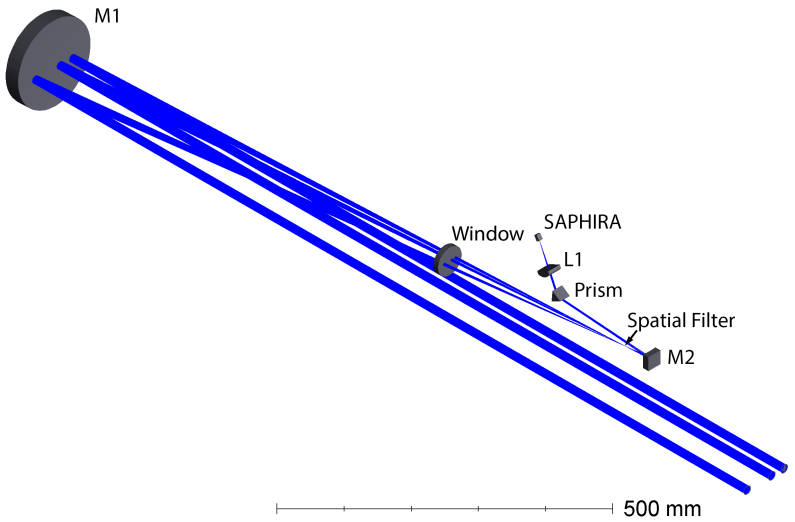

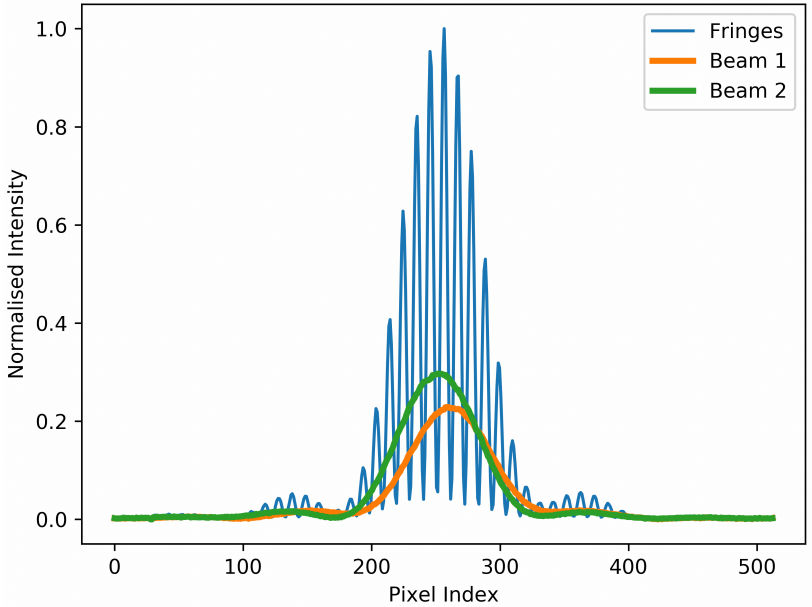

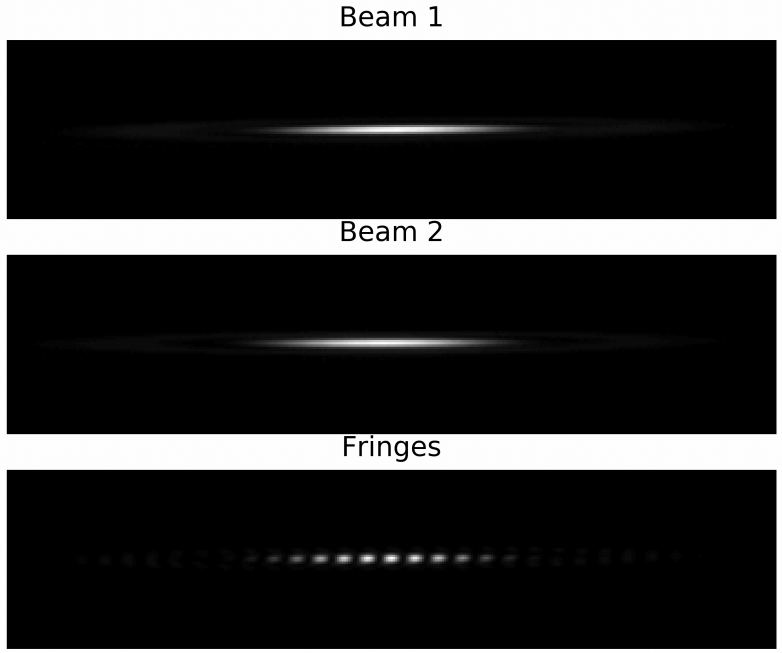

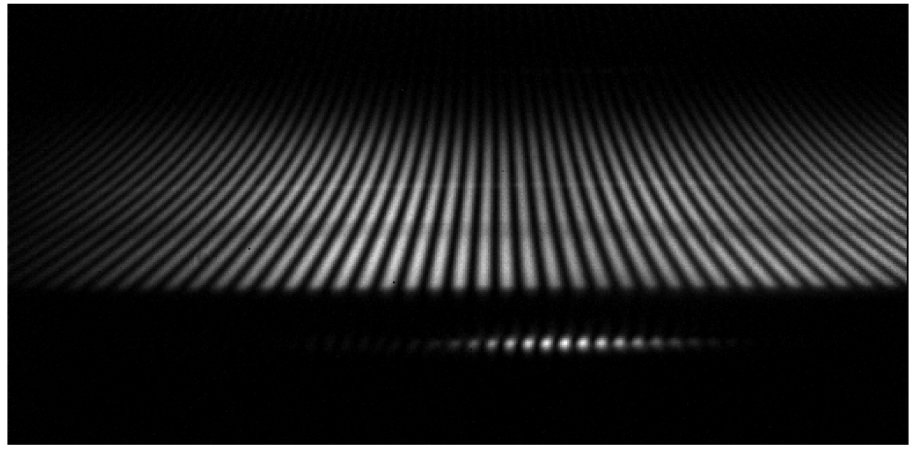

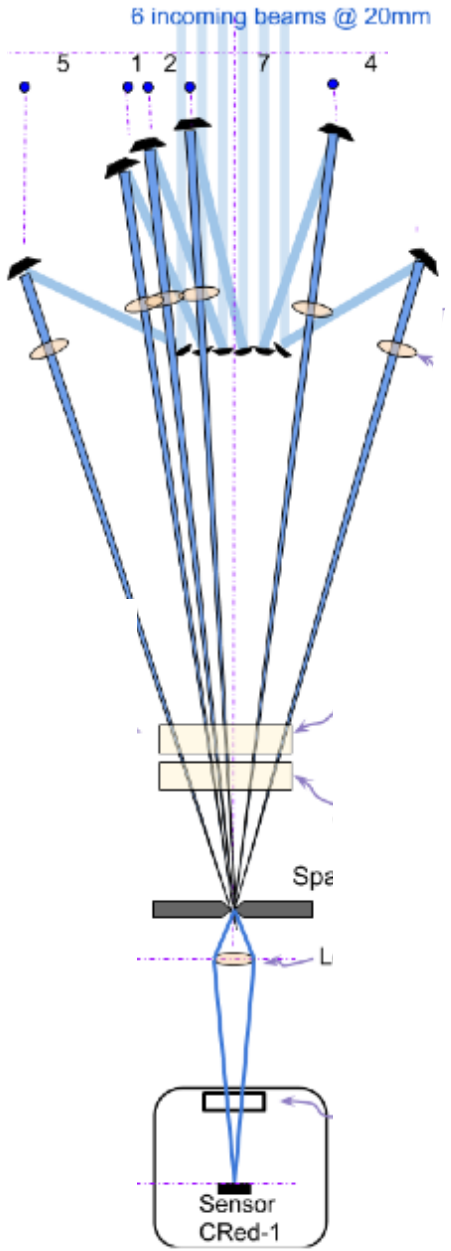

But most importantly…. what is in a name? `Classic++'

Weywot – Tongva Eagle god of sky, stars
(Used for dwarf planet. Appropriation?)

Balerion – Dragon ceated the iron throne

Aeolus / Aether – Greek god of
Air / personification of Space

- Varda, Gwaihir, Aegon….

So long, Farewell, Amen to SUSI …